TECO

INDUCTION MOTORS

MAX-E2™ Premium Efficiency Severe Duty Motors–

Totally Enclosed Fan Cooled

Three Phase, 60 Hz

NEMA Design B or C

3/4 through 300 HP (NEMA Frame 143T through 449TZ)

Class F Insulation with Class B Temperature Rise

Continuous Duty with 1.15 Service Factor

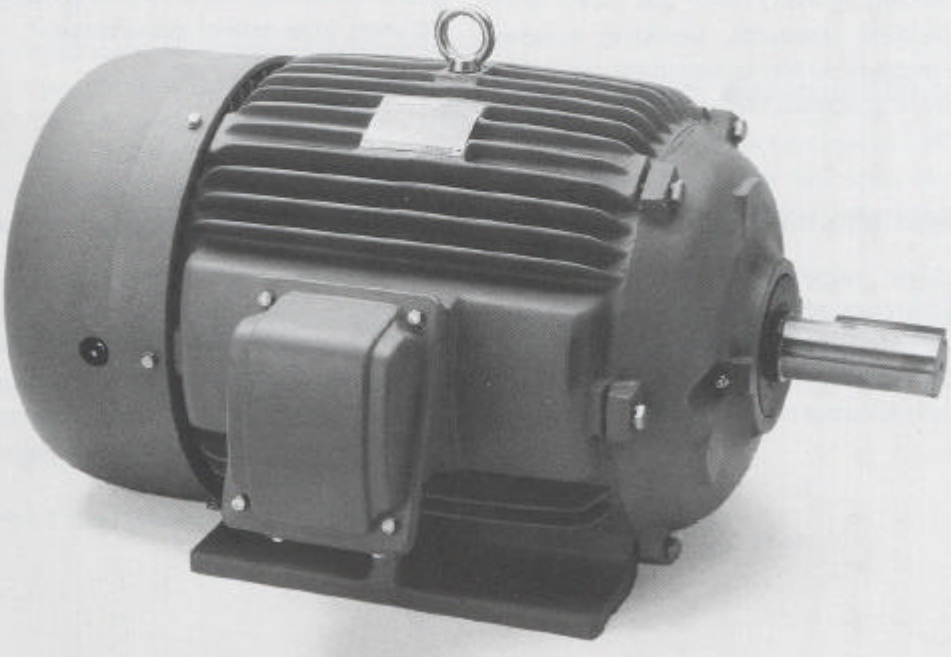

TECO has designed and built the MAX-E2 premium efficiency, severe duty motor to meet industry's most critical needs: low operating cost, high reliability and superior performance.

Superior Efficiencies For Low Operation Cost

The MAX-E2 motor line is designed and manufactured to exceed both the Energy Policy Act of 1992 and Table 12–10 (suggested standard for future design) of NEMA MG1–1993.

Class F Insulation System & Class B Temperature Rise

UL recognized Class F non–hygroscopic insulation system is standard for every motor and meets or exceeds NEMA/IEEE standards, providing excellent resistance to moisture. Cooler operation insures extended insulation life and reliability.

Guaranteed Minimum Efficiency

The nameplate values of NEMA nominal and guaranteed minimum efficiencies of the TECO MAX–E2 motors are based on actual load test at rated voltage per ANSI/IEEE standard 112, method B – the most comprehensive and accurate method to pinpoint true motor efficiencies.

ISO–9000 Quality Assurance

Throughout the manufacturing process, from raw material to finished product, TECO's quality assurance is certified by ISO–9001 & 9002.

Three Year Warranty

TECO MAX–E2 motors are warranted to be free from defects in material and workmanship, including the guaranteed minimum efficiency, for a period of three (3) years from date of manufacture.

Application versatility

- F-1 and F-2 mounting interchangeability
- Accepts C-face (frames 143T-449T/TS) D-Flange (Frames 254T/TS-449T/TS) and P-base (Frames 254T/TS-449T/TS) conversion kits
- Suitable for 208 V operation through 125 HP
- Part winding start capability at low voltage (230 V) from 3/4 HP- 125 HP
- Wye-delta start capability from 7-1/2 HP to 300 HP

Built to weather the toughest industrial environments, the new MAX-E2 comes with a host of features designed to ensure a long, in-the-field life.

All Cast Iron Construction

Stator frames, end brackets, fan cover and conduit boxes are all made of cast iron for corrosion resistance and rigidity. Longer motor life and smooth operation. A corrosion resistant sealing compound is applied on all precisely machined frame-to-end bracket joints to further prevent contaminants from entering the stator.

Oversized Conduit Box

The MAX-E2's 90 degree rotatable, oversized conduit box is made to exceed NEMA/IEC standards for easy electrical connection. The conduit box is fully gasketed with NPT threaded conduit entrance, plus neoprene lead separator, for excellent protection against moisture and dust.

Corrosion-Resistance Surface Coating and Finishing

All interior exposed surfaces, including stator coil ends and rotor surfaces are cleaned and coated with moisture resistant varnish. The exterior is painted with a zinc-chromate epoxy base with a blue finish (No. 2 Munsell 5PB 3/8) which provides excellent protection against acidic and alkaline environments.

Non-Sparking External Fan

All MAX-E2 motors come standard with conductive plastic or bronze non-sparking external cooling fans suitable for Class I, Div. 2 environments.

Oversized Bearings and Lubrication System

Bearings are anti-friction, double shielded and made of vacuum-degassed steel. They are prepacked with lithium-base multi-temperature grease on frames 143T to, and including 365T. Frames 404T and larger are equipped with open bearings.
Regreasable bearing construction is standard on all MAX-E2 motors.

Stainless Steel Hardware

Stainless steel hardware is used on all MAX-E2 motors for maximum corrosion-resistance.

Stainless Steel Nameplate

Corrosion-free stainless steel nameplates with laser-etched imprints ensure permanent motor data.

More superior construction features

- Neoprene shaft slingers on frames 143T to 280T/TS. Neoprene seals / cast iron shaft slinger on both drive-end and non-drive-end on frames 320T/TS and larger.
- Solderless lead lugs and clearly numbered leads
- Condensation drain plugs installed at the lowest position of stator frame

Dimensions Totally-Enclosed Fan-Cooled Horizontal Foot-Mounted, Type AEHH

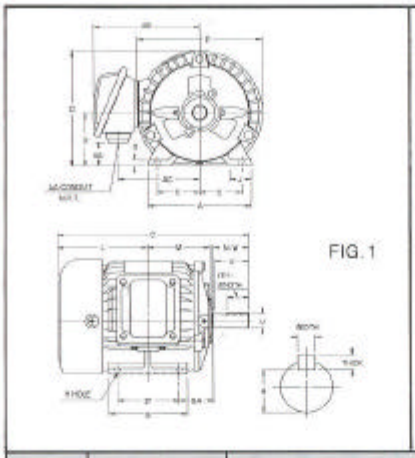

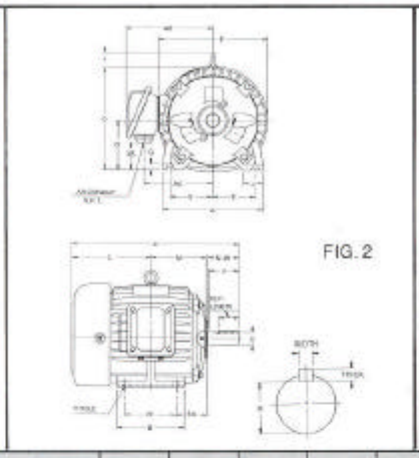

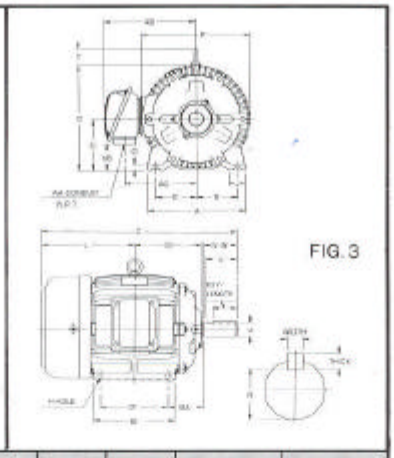

FRAME SIZE	FIG. NO.	MOUNTING				A	B	C	D	G	J	L	M	O
		E	2F	H	BA									
143T 145T	1	2.75 2.75	4.00 5.00	0.34 0.34	2.25 2.25	6.70 6.70	5.10 5.90	12.33 13.33	3.50 3.50	0.35 0.35	1.40 1.40	5.83 6.33	4.03 4.53	7.48 7.48
182T 184T	2	3.75 3.75	4.50 5.50	0.41 0.41	2.75 2.75	8.82 8.82	5.88 6.89	14.73 15.73	4.50 4.50	0.65 0.65	1.75 1.75	6.98 7.48	4.67 5.37	9.17 9.17
213T 215T		4.25 4.25	5.50 7.00	0.41 0.41	3.50 3.50	9.85 9.85	6.89 8.35	17.97 19.47	5.25 5.25	0.70 0.70	1.75 1.75	8.34 9.09	6.10 6.85	10.62 10.62
254T 256T	3	5.00 5.00	8.25 10.00	0.53 0.53	4.25 4.25	11.81 11.81	9.85 11.81	23.70 25.45	6.25 6.25	0.66 0.66	1.95 1.95	11.33 12.20	8.06 8.93	12.80 12.80
284T 284TS		5.50 5.50	9.50 9.50	0.53 0.53	4.75 4.75	13.98 13.98	11.69 11.69	26.80 25.43	7.00 7.00	0.70 0.70	2.95 2.95	12.68 12.68	9.23 9.23	14.50 14.50
286T 286TS		5.50 5.50	11.00 11.00	0.53 0.53	4.75 4.75	13.98 13.98	13.19 13.19	28.30 26.93	7.00 7.00	0.70 0.70	2.95 2.95	13.43 13.43	9.98 9.98	14.50 14.50

FRAME SIZE	P	T	KEY			KEYSEAT	CONDUIT BOX			TERMINAL HOUSING				BEARINGS	
			WIDTH	THICK	LENGTH	R	N – W	U	V	AA	AB	AC	XB	DRIVE END	OPPOSITE DRIVE END
143T 145T	7.95 7.95	— —	.1880 .1880	.1880 .1880	1.41 1.41	0.771 0.771	2.25 2.25	0.675 0.675	2.20 2.20	3 / 4 3 / 4	7.44 7.44	5.51 5.51	0.86 0.86	(6205zzC3) 6205zz (6205zzC3) 6205zz	(6205zzC3) 6205zz (6205zzC3) 6205zz
182T 184T	9.61 9.61	1.30 1.30	.2500 .2500	.2500 .2500	1.78 1.78	0.986 0.986	2.75 2.75	1.125 1.125	2.70 2.70	3 / 4 3 / 4	8.19 8.19	6.26 6.26	1.86 1.86	(6306zzC3) 6306zz (6306zzC3) 6306zz	(6306zzC3) 6306zz (6306zzC3) 6306zz
213T 215T	11.10 11.10	1.65 1.65	.3120 .3120	.3120 .3120	2.41 2.41	1.201 1.201	3.38 3.38	1.375 1.375	3.30 3.30	1 1	9.66 9.66	7.22 7.22	2.34 2.34	(6308zzC3) 6308zz (6308zzC3) 6308zz	(6306zzC3) 6306zz (6306zzC3) 6306zz
254T 256T	13.15 13.15	2.00 2.00	.3750 .3750	.3750 .3750	2.91 2.91	1.416 1.416	4.00 4.00	1.625 1.625	3.90 3.90	1 1/4 1 1/4	11.18 11.18	8.74 8.74	3.22 3.22	(6309zzC3) 6309zz	(6307zzC3) 6307zz
284T 284TS	15.05 15.05	2.00 2.00	.5000 .3750	.5000 .3750	3.28 1.93	1.591 1.416	4.62 3.25	1.875 1.625	4.50 3.20	1 1/2 1 1/2	13.11 13.11	10.23 10.23	3.53 3.53	6311zz (6311zzC3)	6310zz (6310zzC3)
286T 286TS	15.05 15.05	2.00 2.00	.5000 .3750	.5000 .3750	3.28 1.93	1.591 1.416	4.62 3.25	1.875 1.625	4.50 3.20	1 1/2 1 1/2	13.11 13.11	10.23 10.23	3.53 3.53	6311zz (6311zzC3)	6310zz (6310zzC3)

Note:

1. Dimension D tolerance: +0.00 inch −0.03 inch (143T-405T); +0.000 inch −0.06 inch (444T-449T).
2. Dimension U tolerance: +0.000 inch −0.0005 inch (143T-215T); +0.000 inch −0.001 (254T-449T).
3. Dimension R tolerance: +0.000 inch −0.015 inch.
4. Dimension V is the length of straight part of shaft.
5. Bearing No. in. ( ) is for 2P

Dimensions Totally-Enclosed Fan-Cooled Horizontal Foot-Mounted, Type AEHH

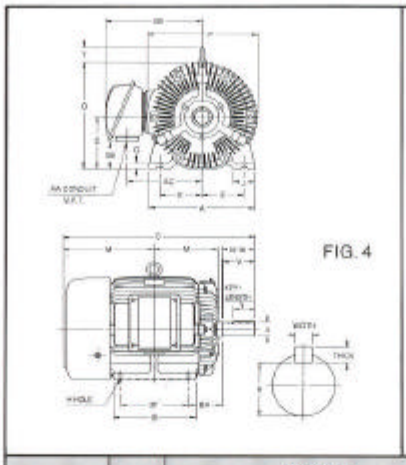

FIG. 4

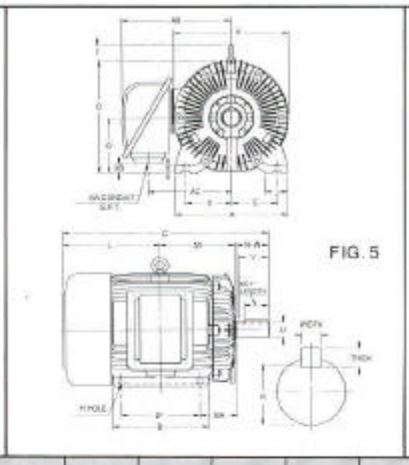

FIG. 5

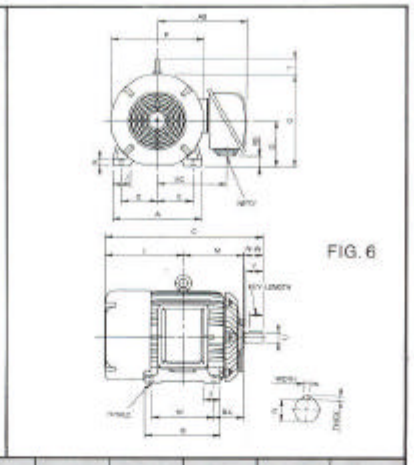

FIG. 6

FRAME SIZE	FIG. NO.	MOUNTING				A	B	C	D	G	J	K	L	M	O
		E	2F	H	BA										
324T	4	6.25	10.50	0.66	5.25	15.75	12.80	29.93	8.00	1.10	3.15	—	14.18	10.10	16.22
324TS		6.25	10.50	0.66	5.25	15.75	12.80	28.43	8.00	1.10	3.15	—	14.18	10.10	16.22
326T		6.25	12.00	0.66	5.25	15.75	14.37	31.43	8.00	1.10	3.15	—	14.93	10.85	16.22
326TS		6.25	12.00	0.66	5.25	15.75	14.37	29.93	8.00	1.10	3.15	—	14.93	10.85	16.22
364T		7.00	11.25	0.66	5.88	17.70	13.78	32.55	9.00	1.32	3.54	—	15.17	11.09	17.99
364TS		7.00	11.25	0.66	5.88	17.70	13.78	30.42	9.00	1.32	3.54	—	15.17	11.09	17.99
365T		7.00	12.25	0.66	5.88	17.70	14.76	33.55	9.00	1.32	3.54	—	15.67	11.59	17.99
365TS		7.00	12.25	0.66	5.88	17.70	14.76	31.42	9.00	1.32	3.54	—	15.67	11.59	17.99
404T	5	8	12.25	0.81	6.62	19.68	15.16	36.30	10.00	1.57	3.94	—	16.30	12.52	20.00
405T		8	13.75	0.81	6.62	19.68	16.73	37.80	10.00	1.57	3.94	—	17.05	13.27	20.00
405TS		8	13.75	0.81	6.62	19.68	16.73	34.80	10.00	1.57	3.94	—	17.05	13.27	20.00
444T	6	9.00	14.50	0.81	7.50	22.05	17.50	41.65	11.00	1.40	4.35	4.35	18.40	14.30	22.45
444TS		9.00	14.50	0.81	7.50	22.05	17.50	37.90	11.00	1.40	4.35	4.35	18.40	14.30	22.45
445T		9.00	16.50	0.81	7.50	22.05	19.50	43.65	11.00	1.40	4.35	4.35	19.40	15.30	22.45
445TS		9.00	16.50	0.81	7.50	22.05	19.50	39.90	11.00	1.40	4.35	4.35	19.40	15.30	22.45
447TZ		9.00	20.00	0.81	7.50	22.05	23.25	47.35	11.00	1.40	4.35	4.35	21.35	17.35	23.55
447TS		9.00	20.00	0.81	7.50	22.05	23.25	43.60	11.00	1.40	4.35	4.35	21.35	17.15	23.55
449TZ		9.00	25.00	0.81	7.50	22.05	27.95	52.35	11.00	1.40	4.35	4.35	23.85	19.85	23.55
449TS		9.00	25.00	0.81	7.50	22.05	27.95	48.60	11.00	1.40	4.35	4.35	23.85	19.65	23.55

FRAME SIZE	P	T	KEY			KEYSEAT	CONDUIT BOX			TERMINAL HOUSING				BEARING	
			WIDTH	THICK	LENGTH	R	N—W	U	V	AA	AB	AC	XB	DRIVE END	OPPOSITE DRIVE END
324T	16.55	2.35	.5000	.5000	3.91	1.845	5.25	2.125	5.15	2	14.57	11.22	3.59	6312zz	6212zz
324TS	16.55	2.35	.5000	.5000	2.03	1.591	3.75	1.875	3.65	2	14.57	11.22	3.59	(6312zzC3)	(6212zzC3)
326T	16.55	2.35	.5000	.5000	3.91	1.845	5.25	2.125	5.15	2	14.57	11.22	3.59	6312zz	6212zz
326TS	16.55	2.35	.5000	.5000	2.03	1.591	3.75	1.875	3.65	2	14.57	11.22	3.59	(6312zzC3)	(6212zzC3)
364T	18.03	2.80	.6250	.6250	4.28	2.021	5.88	2.375	5.75	3	16.73	12.99	2.39	6313zz	6213zz
364TS	18.03	2.80	.5000	.6000	2.03	1.591	3.75	1.875	3.65	3	16.73	12.99	2.39	(6312zzC3)	(6212zzC3)
365T	18.03	2.80	.6250	.6250	4.28	2.021	5.88	2.375	5.75	3	16.73	12.99	2.39	6313zz	6213zz
365TS	18.03	2.80	.5000	.5000	2.03	1.591	3.75	1.875	3.65	3	16.73	12.99	2.39	(6312zzC3)	(6212zzC3)
404T	20.08	2.80	.7500	.7500	5.65	2.450	7.25	2.875	7.16	3	19.30	14.76	1.81	6317	6313
405T	20.08	2.80	.7500	.7500	5.65	2.450	7.25	2.875	7.16	3	19.30	14.76	1.81	6317	6313
405TS	20.08	2.80	.5000	.5000	2.78	1.845	4.25	2.125	4.13	3	19.30	14.76	1.81	6313C3	6313C3
444T	22.85	3.55	.8750	.8750	6.93	2.860	6.50	3.375	6.00	—	21.25	16.75	4.85	6316	6316
444TS	22.85	3.55	.6250	.6250	3.03	2.021	4.75	2.375	4.50	—	21.25	16.75	4.85	6314C3	6314C3
445T	22.85	3.55	.8750	.8750	6.93	2.860	6.50	3.375	6.00	—	21.25	16.75	4.85	6316	6316
445TS	22.85	3.55	.6250	.6250	3.03	2.021	4.75	2.375	4.50	—	21.25	16.75	4.85	6314C3	6314C3
447TZ	25.0	4.35	.8750	.8750	6.93	2.860	6.50	3.375	6.00	—	22.25	17.70	4.65	6320	6316
447TS	25.0	4.35	.6250	.6250	3.03	2.021	4.75	2.375	4.50	—	22.25	17.70	4.65	6314C3	6314C3
449TZ	25.0	4.35	.8750	.8750	6.93	2.860	6.50	3.375	6.00	—	22.25	17.70	4.65	6320	6316
449TS	25.0	4.35	.6250	.6250	3.03	2.021	4.75	2.375	4.50	—	22.25	17.70	4.65	6314C3	6314C3

Note:

1. Dimension D tolerance: +0.00 inch −0.03 inch (143-405T); +0.000 inch −0.06 inch (444T-449T).
2. Dimension U tolerance: +0.000 inch −0.0005 inch (143T-215T); +0.000 inch −0.001 (254T-449T).
3. Dimension R tolerance: +0.000 inch −0.015 inch.
4. Dimension V is the length of straight part of shaft.
5. Bearing No. in. ( ) is for 2P

Performance Data MAX-E2 Premium Efficiency, Type AEHH

Totally Enclosed Fan Cooled, 3/60/230-460V (usable on 208V); 575V

NEMA design B or Design C, Class F Insulation, 40 degree C ambient, Continuous Duty, 1.15 service factor

HP	FULL LOAD RPM	FRAME SIZE	FULL LOAD					LOCKED ROTOR		BREAK DOWN TORQUE % FLT	ROTOR WR² LB-FT²	NEMA CODE LETTER	APPROX NET WT. LBS
			TORQUE LB-FT	NOM. EFF. %	MIN. EFF %	P.F. %	CURRENT AMPS @460V	TORQUE % FLT	CURRENT AMPS @460V				
1	1745	143T	3.0	86.5	84.1	77.0	1.5	310	15	410	0.103	N	55
	1150	145T	4.6	85.5	83.0	68.5	1.7	260	15	320	0.136	N	62
1.5	3465	143T	2.3	85.5	84.0	84.5	2.0	340	20	350	0.052	M	55
	1730	145T	4.6	86.5	85.0	81.0	2.1	300	20	360	0.118	M	62
	1170	182T	6.7	86.5	85.4	67.0	2.5	210	20	350	0.317	M	95
2	3465	145T	3.0	86.5	85.5	86.5	2.6	350	25	390	0.064	L	62
	1730	145T	6.1	86.5	85.3	80.0	2.8	320	25	360	0.136	L	62
	1175	184T	8.9	88.5	86.5	70.0	3.1	200	25	310	0.495	L	114
3	3490	182T	4.5	88.5	86.5	91.5	3.6	280	32	380	0.190	K	95
	1755	182T	8.9	89.5	87.5	84.0	3.8	250	32	360	0.348	K	95
	1175	213T	13.4	90.2	88.5	78.5	4.1	210	32	340	0.915	K	167
5	3480	184T	7.5	89.5	87.7	93.5	5.7	290	46	320	0.272	J	114
	1750	184T	15.0	89.5	88.1	86.5	6.2	250	46	330	0.500	J	114
	1170	215T	22.4	90.2	88.5	82.5	6.4	190	46	300	1.220	J	189
7.5	3510	213T	11.2	91.0	89.6	90.0	8.7	200	64	275	0.448	H	167
	1755	213T	22.4	91.7	90.3	86.5	9.0	270	64	300	0.790	H	167
	1170	254T	33.7	91.7	90.4	81.5	9.5	240	64	270	2.158	H	288
10	3510	215T	15.0	91.7	90.2	90.5	11.5	220	81	260	0.573	H	189
	1755	215T	30.0	91.7	90.4	88.0	11.8	260	81	290	1.024	H	189
	1175	256T	44.6	92.4	91.0	80.5	12.8	260	81	300	2.863	H	332
15	3525	254T	22.3	91.7	91.3	92.5	16.7	210	116	270	1.088	G	288
	1765	254T	44.5	93.0	91.7	88.5	17.3	245	116	280	2.172	G	288
	1175	284T	66.8	92.4	91.0	83.0	18.6	250	116	250	6.800	G	429
20	3520	256T	29.8	92.4	91.2	92.5	22.3	210	145	260	1.407	G	332
	1765	256T	59.5	93.0	92.0	89.5	22.8	230	145	260	2.741	G	332
	1170	286T	89.7	92.4	91.0	83.5	24.5	200	145	230	7.961	G	475
25	3545	284TS	37.0	93.0	92.1	92.0	27.8	175	183	250	2.595	G	418
	1765	284T	74.2	93.6	92.4	87.5	29.0	210	183	240	4.410	G	429
	1170	324T	112.0	93.0	92.4	82.0	31.0	200	183	220	10.887	G	664
30	3545	286TS	44.4	93.0	92.2	91.5	33.5	175	218	240	2.930	G	455
	1765	286T	89.0	93.6	92.7	88.0	34.5	230	218	250	5.044	G	475
	1175	326T	134.0	93.6	92.5	83.0	36.5	210	218	230	12.372	G	724
40	3550	324TS	59.0	94.1	93.1	91.5	44.0	150	290	240	3.590	G	618
	1770	324T	119.0	94.1	93.2	89.0	45.3	220	290	240	8.624	G	664
	1180	364T	178.0	94.1	93.1	85.5	47.0	200	290	230	17.936	G	898
50	3550	326TS	74.0	94.1	93.0	91.5	55.0	150	363	240	4.488	G	693
	1770	326T	148.0	94.5	93.6	88.5	56.5	240	363	250	10.089	G	724
	1180	365T	223.0	94.1	93.1	86.5	58.5	200	363	220	21.386	G	928
60	3550	364TS	88.5	94.5	93.6	92.5	65.0	145	435	240	7.355	G	818
	1775	364T	178.0	95.0	94.1	86.0	69.5	200	435	230	11.738	G	898
	1180	404T	266.0	95.0	94.1	86.5	69.0	230	435	250	30.186	G	1166
75	3555	365TS	110.0	95.0	94.1	93.0	80.0	145	543	250	9.026	G	880
	1775	365T	221.0	95.4	94.5	86.5	86.0	215	543	230	14.624	G	928
	1180	405T	333.0	95.0	94.1	87.0	86.0	230	543	260	36.116	G	1298
100	3560	405TS	147.0	95.4	94.5	90.0	110.0	140	725	270	10.737	G	1144
	1780	405T	294.0	95.4	94.5	88.0	113.0	240	725	250	20.547	G	1298
	1182	444T	444.0	95.4	94.5	83.0	118.0	140	725	230	56,000	G	1716
125	3566	444TS	184.0	95.4	94.5	86.5	142.0	110	910	220	16.600	G	1650
	1780	444T	368.0	95.8	95.0	85.0	144.0	130	910	220	44.300	G	1716
	1185	445T	554.0	95.4	94.5	84.0	146.0	140	910	230	68.000	G	1991
150	3570	445TS	220.0	95.8	95.0	87.5	168.0	110	1085	220	20.000	G	1881
	1783	445T	442.0	96.2	95.4	85.0	172.0	130	1085	220	52.000	G	1991
	1186	447TZ	664.0	95.8	95.0	84.5	174.0	135	1085	220	103.000	G	2662
200	3580	447TS	293.0	95.8	95.0	87.5	223.0	104	1450	210	32.000	G	2552
	1786	447TZ	588.0	96.2	95.4	85.5	228.0	120	1450	210	73.500	G	2662
	1186	449TZ	885.0	95.8	95.0	84.0	233.0	135	1450	210	125.000	G	3124
250	3583	449TS	366.0	95.8	95.0	89.0	275.0	103	1825	210	44.000	G	3014
	1787	449TZ	734.0	96.2	95.4	87.0	280.0	110	1825	210	83.000	G	3124
	1188	449TZ	1104.0	95.8	95.0	85.0	287.0	110	1825	210	140.000	G	3124
300	3583	449TS	439.0	95.8	95.0	89.0	329.0	102	2170	210	52.500	G	3014
	1788	449TZ	880.0	96.2	95.4	87.0	336.0	100	2170	210	107.000	G	3124

Note:

1. The above are typical values based on test.
2. Actual load and full voltage starting: According to ANSI/IEEE standard 112-1978 method B.
3. Minimum guaranteed efficiency values can be certified with actual tests.
4. 150 HP and above are 460V only.
5. Data subject to change without notice.

Compare and make the clear choice

Before specifying a motor that meets your needs for energy efficiency and severe operating environemnts, compare Teco's new MAX-E2 to the competition. It's easy to estimate the power cost savings resulting from replacing a standard efficiency motor or competing premium efficiency motor with the MAX-E2. Simply use the following formula to easily calculate the annual savings the new MAX-E2 will deliver.

$$S = 0.746 \times HP \times L \times C \times N \left(\frac{100}{Eb} - \frac{100}{Ea}\right)$$

Example: $S = 0.746 \times 75 \times 100/100 \times 0.076 \times 8760\ (100/92.4 - 100/95.4)$
$S = \$1267$ per year

S = Annual savings in dollars
L = Percent load divided by 100
C = Cost of Electricity ($/Kilowatt Hour, ex. $0.076/kWh)
N = Annual hours of operation (running time, ex. 24 hrs. a day, 365 days a year)
Ea = MAX-E2 motor efficiency (ex. 95.4% for MAX-E2, 75 HP, 1800 RPM)
Eb = Standard motor efficiency or competition (ex. 92.4%)

TECO ELECTRIC & MACHINERY CO., LTD.
5F,19-9,SAN CHONG RD, NAN-KANG,TAIPEI 115,TAIWAN,ROC
FAX : (02)2655-2231~2
TELEPHONE : (02)2655-3333
http : //www.teco.com.tw

AUG. 2000/TA8046A